LDK® Take Up Units

UKT+H Standard duty,Tapered bore,Adapter sleeve locking



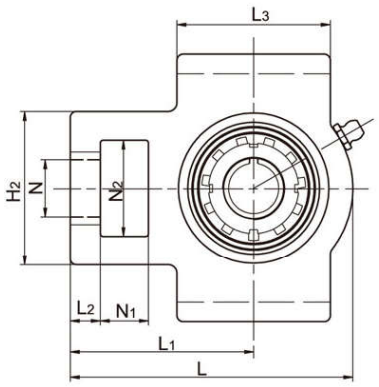

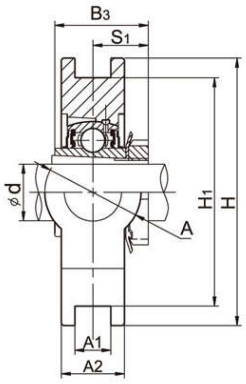

Unit No.	Shaft Dia d		Dimensions (mm)														Weight (kg)
	(in)	(mm)	N_1	L_2	H_2	N_2	N	L_3	A_1	H_1	H	L	A	A_2	L_1	B_3	S_1	
UKT205+H2305		20	16	10	51	32	19	51	12	76	89	97	32	24	62	35	18.5	0.8
205+HE2305	3/4																	
UKT206+H2306		25	16	10	56	37	22	57	12	89	102	113	37	28	70	38	20.5	1.26
206+HS2306	7/8																	
206+HE2306	1																	
UKT207+H2307		30	16	13	64	37	22	64	12	89	102	129	37	30	78	43	22.5	1.68
207+HS2307	1-1/8																	
UKT208+H2308		35	19	16	83	49	29	83	16	102	114	144	49	33	88	46	24.5	2.28
208+HE2308	1-1/4																	
208+HS2308	1-3/8																	
UKT209+H2309		40	19	16	83	49	29	83	16	102	117	144	49	35	87	50	26	2.52
209+HA2309	1-7/16																	
209+HE2309	1-1/2																	
209+HS2309	1-5/8																	
UKT210+H2310		45	19	16	83	49	29	86	16	102	117	149	49	37	90	55	27.5	2.75
210+HS2310	1-5/8																	
210+HA2310	1-11/16																	
210+HE2310	1-3/4																	
UKT211+H2311		50	25	19	102	64	35	95	22	130	146	171	64	38	106	59	28.5	4.1
211+HS2311	1-7/8																	
211+HA2311	1-15/16																	
211+HE2311	2																	
UKT212+H2312		55	32	19	102	64	35	102	22	130	146	194	64	42	119	62	31	4.9
212+HS2312	2-1/8																	
UKT213+H2313		60	32	21	111	70	41	121	26	151	167	224	70	44	137	65	32	6.7
213+HA2313	2-3/16																	
213+HE2313	2-1/4																	
213+HS2313	2-3/8																	
UKT215+H2315		65	32	21	111	70	41	121	26	151	167	232	70	48	140	73	35.5	7.4
215+HA2315	2-7/16																	
215+HE2315	2-1/2																	
UKT216+H2316		70	32	21	111	70	41	121	26	165	184	235	70	51	140	78	39	8.1
216+HA2316	2-11/16																	
216+HE2316	2-3/4																	
UKT217+H2317		75	38	29	124	73	48	157	30	173	198	260	73	54	162	82	40	11
217+HA2317	2-15/16																	
217+HE2317	3																	