Agricultural/Farm Implement Bearings

Farm implement bearings,Relubricatable type



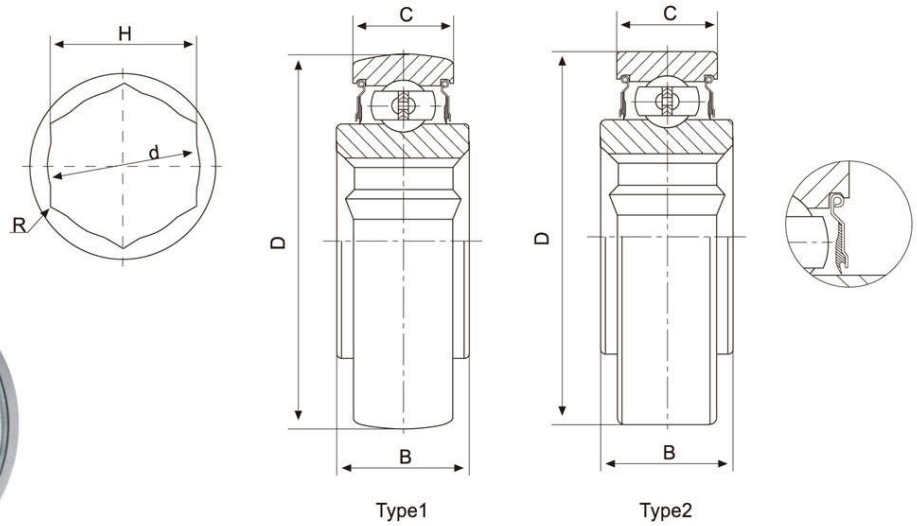

HEX BORE

Bearing No.	Type	Dimensions (mm)/(in.)						Basic load ratings (N)		Mass (kg)
		H	d	R	D	B	C	Dynarmic Cr	Static Cor	
205NPPB AH02	1	22.25 0.8760	22.7 0.8937	0.2 0.0079	52 2.0472	25.4 1.0000	15 0.5906	14000	7880	0.20
206NPPB AH02	1	22.25 0.8760	22.7 0.8937	0.2 0.0079	62 2.4409	24 0.9449	18 0.7087	19500	11200	0.37
206NPPB AH04	1	25.43 1.0012	26 1.0236	0.2 0.0079	62 2.4409	24 0.9449	18 0.7087	19500	11200	0.35
207NPPB AH09	1	28.6 1.1260	29.4 1.1575	0.2 0.0079	72 2.8346	37.7 1.4843	17 0.6693	25700	15200	0.48
207KPP3	2	31.77 1.2508	32.5 1.2795	0.2 0.0079	72 2.8346	37.7 1.4843	17 0.6693	25700	15200	0.45
207KPP17	2	28.6 1.1260	29.4 1.1575	0.2 0.0079	72 2.8346	25 0.9843	17 0.6693	25700	15200	0.42
207KPPB3	1	31.77 1.2508	32.5 1.2795	0.2 0.0079	72 2.8346	25 0.9843	17 0.6693	25700	15200	0.40