## TP-SUCFL Thermoplastic flange 2-bolt,Solid base housing,Stainless steel inserts, With food grade grease and silicon rubber seal,Setscrew locking



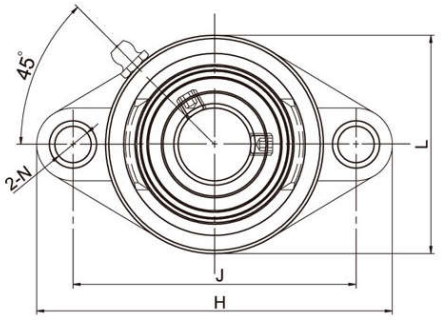


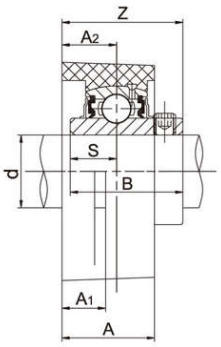


| Unit No. | Shaft Dia d (in) | Shaft Dia d (mm) | H | J | A2 | A1 | A | N | L | B | S | Z | Bolt Size (mm) | Weight (kg) |
|---|---|---|---|---|---|---|---|---|---|---|---|---|---|---|
| TP-SUCFL201 | | 12 | 113 | 90 | 15.4 | 14 | 26.5 | 11 | 65 | 31 | 12.7 | 33.7 | M10 | 0.25 |
| 201-8 | 1/2 | | | | | | | | | | | | | |
| TP-SUCFL202 | | 15 | 113 | 90 | 15.4 | 14 | 26.5 | 11 | 65 | 31 | 12.7 | 33.7 | M10 | 0.25 |
| 202-9 | 9/16 | | | | | | | | | | | | | |
| 202-10 | 5/8 | | | | | | | | | | | | | |
| TP-SUCFL203 | | 17 | 113 | 90 | 15.4 | 14 | 26.5 | 11 | 65 | 31 | 12.7 | 33.7 | M10 | 0.25 |
| 203-11 | 11/16 | | | | | | | | | | | | | |
| TP-SUCFL204 | | 20 | 113 | 90 | 15.4 | 14 | 26.5 | 11 | 65 | 31 | 12.7 | 33.7 | M10 | 0.25 |
| 204-12 | 3/4 | | | | | | | | | | | | | |
| TP-SUCFL205 | | 25 | 131 | 99 | 17 | 14 | 29 | 11 | 69 | 34.1 | 14.3 | 36.7 | M10 | 0.32 |
| 205-14 | 7/8 | | | | | | | | | | | | | |
| 205-15 | 15/16 | | | | | | | | | | | | | |
| 205-16 | 1 | | | | | | | | | | | | | |
| TP-SUCFL206 | | 30 | 148 | 117 | 19 | 14 | 31 | 11 | 80 | 38.1 | 15.9 | 41.2 | M10 | 0.5 |
| 206-17 | 1-1/16 | | | | | | | | | | | | | |
| 206-18 | 1-1/8 | | | | | | | | | | | | | |
| 206-19 | 1-3/16 | | | | | | | | | | | | | |
| 206-20 | 1-1/4 | | | | | | | | | | | | | |
| TP-SUCFL207 | | 35 | 166 | 130 | 18 | 16 | 32 | 13 | 92 | 42.9 | 17.5 | 43.4 | M12 | 0.7 |
| 207-20 | 1-1/4 | | | | | | | | | | | | | |
| 207-21 | 1-5/16 | | | | | | | | | | | | | |
| 207-22 | 1-3/8 | | | | | | | | | | | | | |
| 207-23 | 1-7/16 | | | | | | | | | | | | | |
| TP-SUCFL208 | | 40 | 176 | 144 | 21.5 | 20 | 37.5 | 14 | 101 | 49.2 | 19 | 51.7 | M12 | 0.89 |
| 208-24 | 1-1/2 | | | | | | | | | | | | | |
| 208-25 | 1-9/16 | | | | | | | | | | | | | |
| TP-SUCFL209 | | 45 | 189 | 148.5 | 24 | 21 | 41 | 17 | 108 | 49.2 | 19 | 54.2 | M16 | 1.01 |
| 209-26 | 1-5/8 | | | | | | | | | | | | | |
| 209-27 | 1-11/16 | | | | | | | | | | | | | |
| 209-28 | 1-3/4 | | | | | | | | | | | | | |
| TP-SUCFL210 | | 50 | 197 | 157 | 25 | 21 | 43 | 17 | 116 | 51.6 | 19 | 57.6 | M16 | 1.13 |
| 210-30 | 1-7/8 | | | | | | | | | | | | | |
| 210-31 | 1-15/16 | | | | | | | | | | | | | |
| 210-32 | 2 | | | | | | | | | | | | | |
| TP-SUCFL211 | | 55 | 224 | 184 | 25 | 20 | 43 | 17 | 130 | 55.6 | 22.2 | 58.1 | M16 | 1.5 |
| 211-32 | 2 | | | | | | | | | | | | | |
| 211-34 | 2-1/8 | | | | | | | | | | | | | |
| 211-35 | 2-3/16 | | | | | | | | | | | | | |
| TP-SUCFL212 | | 60 | 250 | 202 | 29 | 20 | 48 | 18 | 140 | 65.1 | 25.4 | 68.7 | M16 | 2.1 |
| 212-36 | 2-1/4 | | | | | | | | | | | | | |
| 212-38 | 2-3/8 | | | | | | | | | | | | | |
| 212-39 | 2-7/16 | | | | | | | | | | | | | |

| MODE OF LOAD | BREAKING POINT OF HOUSINGS(N) | | | | | | | | |
|---|---|---|---|---|---|---|---|---|---|
| | 204 | 205 | 206 | 207 | 208 | 209 | 210 | 211 | 212 |
| P ← → P | 10872 | 12554 | 18224 | 16900 | 17213 | 17600 | 17950 | 18300 | 18700 |
| P, P, P | 10590 | 15093 | 16826 | 14900 | 15150 | 15350 | 15650 | 15900 | 16250 |
| P, P, P | 5150 | 5310 | 5630 | 6000 | 6510 | 6940 | 7590 | 8250 | 8950 |

Notes:Anti-Bacteria Protection Series is available by adding prefix"AB" as designation.Ordering example:ABTP-SUCFL204