TP-SUCFB Thermoplastic flange bracket,Stainless steel inserts, With food grade grease and silicon rubber seal,Setscrew locking



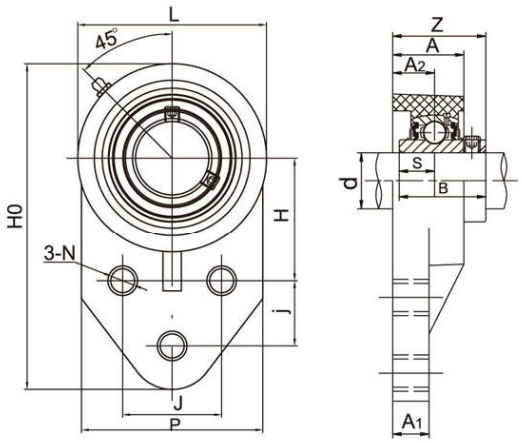

Unit No.	Shaft Dia d (in)	Shaft Dia d (mm)	Dimensions(mm) H0	H	J	j	A2	A1	A	N	L	P	B	S	Z	Bolt Size (mm)	Weight (kg)
TP-SUCFB201	1/2	12	108	42.9	38.1	22.2	19.7	11.4	31.2	11	63	62	31	12.7	38	M10	0.28
201-8																	
TP-SUCFB202	9/16	15	108	42.9	38.1	22.2	19.7	11.4	31.2	11	63	62	31	12.7	38	M10	0.26
202-9	5/8																
202-10																	
TP-SUCFB203	11/16	17	108	42.9	38.1	22.2	19.7	11.4	31.2	11	63	62	31	12.7	38	M10	0.25
203-11																	
TP-SUCFB204	3/4	20	108	42.9	38.1	22.2	19.7	11.4	31.2	11	63	62	31	12.7	38	M10	0.25
204-12																	
TP-SUCFB205	7/8	25	121	46	41.3	28.6	21.3	12.3	33	11	70	63	34.1	14.3	41.1	M10	0.30
205-14	15/16																
205-15	1																
205-16																	
TP-SUCFB206	1-1/16	30	139	52.4	47.6	31.8	22.9	14.5	35.4	11	83	76	38.1	15.9	47.6	M10	0.46
206-17	1-1/8																
206-18	1-3/16																
206-19	1-1/4																
206-20																	
TP-SUCFB207	1-1/4	35	158	60.3	50.8	31.8	24.5	17	37.5	13	94	89	42.9	17.5	50.8	M12	0.66
207-20	1-5/16																
207-21	1-3/8																
207-22	1-7/16																
207-23																	
TP-SUCFB208	1-1/2	40	178	67.3	54	35.5	26	18.5	39.5	13	103	99	49.2	19	54	M12	0.9
208-24	1-9/16																
208-25																	

MODE OF LOAD	BREAKING POINT OF HOUSINGS(N) 204	205	206	207	208
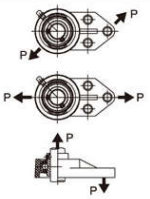	7200	9100	12200	12900	13600
	9200	11100	11800	11900	12100
	2600	2800	2900	3100	3300

Notes:Anti-Bacteria Protection Series is available by adding prefix"AB" as designation.Ordering example:ABTP-SUCFB204