4-Bolt Flange Units

UCFX Medium duty,Wider inner ring bearing, Setscrew locking



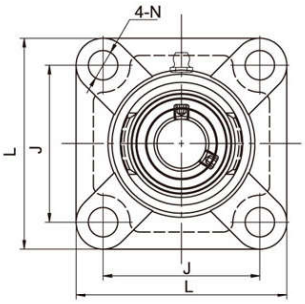

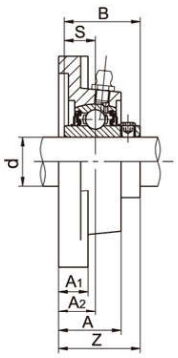

Unit No.	Shaft Dia d (in)	Shaft Dia d (mm)	L	J	A2	A1	A	N	B	S	Z	Bolt Size (mm)	Weight (kg)
UCFX05		25											
05-13	13/16		108	83	18	13	30	12	38.1	15.9	40.2	M10	1.0
05-14	7/8												
05-15	15/16												
05-16	1												
UCFX06		30											
06-17	1-1/16		117	92	19	14	34	16	42.9	17.5	44.4	M14	1.7
06-18	1-1/8												
06-19	1-3/16												
06-20	1-1/4												
UCFX07		35											
07-21	1-5/16		130	101.5	21	14	38	16	49.2	19	51.2	M14	2.1
07-22	1-3/8												
07-23	1-7/16												
UCFX08		40											
08-24	1-1/2		137	105	22	14	40	19	49.2	19	52.2	M16	2.4
08-25	1-9/16												
UCFX09		45											
09-26	1-5/8		143	111	23	14	40	19	51.6	19	55.6	M16	2.5
09-27	1-11/16												
09-28	1-3/4												
09-29	1-13/16												
UCFX10		50											
10-30	1-7/8		162	130	26	20	44	19	55.6	22.2	59.4	M16	3.9
10-31	1-15/16												
10-32	2												
UCFX11		55											
11-33	2-1/16		175	143	29	20	49	19	65.1	25.4	68.7	M16	4.9
11-34	2-1/8												
11-35	2-3/16												
11-36	2-1/4												
11-37	2-5/16												
UCFX12		60											
12-38	2-3/8		187	149	34	21	59	19	65.1	25.4	73.7	M16	5.2
12-39	2-7/16												
UCFX13		65											
13-40	2-1/2		187	149	34	21	59	19	74.6	30.2	78.4	M16	5.3
13-41	2-9/16												
UCFX14		70											
14-42	2-5/8		197	152	37	24	60	23	77.8	33.3	81.5	M20	7.3
14-43	2-11/16												
14-44	2-3/4												
UCFX15		75											
15-45	2-13/16		197	152	40	24	68	23	82.6	33.3	89.3	M20	8.1
15-46	2-7/8												
15-47	2-15/16												
15-48	3												
UCFX16		80											
16-49	3-1/16		214	171	40	24	70	23	85.7	34.1	91.6	M20	9.9
16-50	3-1/8												
16-51	3-3/16												
16-52	3-1/4												
UCFX17		85											
17-53	3-5/16		214	171	40	24	70	23	96	39.7	96.3	M20	11
17-55	3-7/16												

Notes:Bearing housing solid base optional,add suffix SB as designation.