UCF Standard duty,Wider inner ring bearing,Setscrew locking



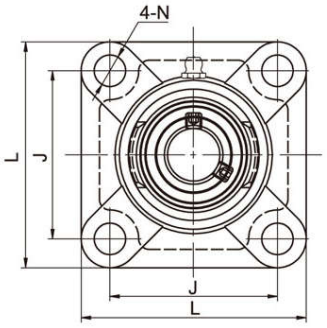

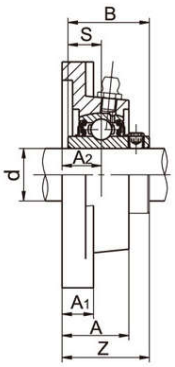

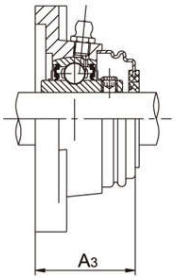

Unit No.	Shaft Dia d		Dimensions(mm)										Bolt Size (mm)	Weight (kg)
	(in)	(mm)	L	J	A_2	A_1	A	N	B	S	Z	A_3		
UCWF201		12	76	54	15	11	25.5	12	27.4	11.5	30.9		M10	0.72
202		15												0.62
203		17												0.61
UCF201		12	86	64	15	12	25.5	12	31	12.7	33.3		M10	0.61
201-8	1/2													
UCF202		15	86	64	15	12	25.5	12	31	12.7	33.3		M10	0.61
202-9	9/16													
202-10	5/8													
UCF203		17	86	64	15	12	25.5	12	31	12.7	33.3		M10	0.61
203-11	11/16													
UCF204		20	86	64	15	12	25.5	12	31	12.7	33.3	38.2	M10	0.61
204-12	3/4													
UCF205		25	95	70	16	14	27	12	34.1	14.3	35.8	40	M10	0.80
205-14	7/8													
205-15	15/16													
205-16	1													
UCF206		30	108	83	18	14	31	12	38.1	15.9	40.2	44	M10	1.00
206-17	1-1/16													
206-18	1-1/8													
206-19	1-3/16													
206-20	1-1/4													
UCF207		35	117	92	19	16	34	14	42.9	17.5	44.4	48.5	M12	1.40
207-20	1-1/4													
207-21	1-5/16													
207-22	1-3/8													
207-23	1-7/16													
UCF208		40	130	102	21	16	36	16	49.2	19	51.2	55.1	M14	1.80
208-24	1-1/2													
208-25	1-9/16													
UCF209		45	137	105	22	18	38	16	49.2	19	52.2	57	M14	2.20
209-26	1-5/8													
209-27	1-11/16													
209-28	1-3/4													
UCF210		50	143	111	22	18	40	16	51.6	19	54.6	60	M14	2.40
210-30	1-7/8													
210-31	1-15/16													
210-32	2													
UCF211		55	162	130	25	20	43	19	55.6	22.2	58.4	63	M16	3.50
211-32	2													
211-34	2-1/8													
211-35	2-3/16													
UCF212		60	175	143	29	20	48	19	65.1	25.4	68.7	73.5	M16	4.20
212-36	2-1/4													
212-38	2-3/8													
212-39	2-7/16													
UCF213		65	187	149	30	22	50	19	65.1	25.4	69.7	74.5	M16	5.30
213-40	2-1/2													
UCF214		70	193	152	31	22	54	19	74.6	30.2	75.4	80	M16	5.90
214-44	2-3/4													
UCF215		75	200	159	34	22	56	19	77.8	33.3	78.5	82.5	M16	6.30
215-47	2-15/16													
215-48	3													
UCF216		80	208	165	34	22	58	23	82.6	33.3	83.3	89	M20	7.30
UCF217		85	220	175	36	24	63	23	85.7	34.1	87.6	92.1	M20	8.90
217-52	3-1/4													
UCF218		90	235	187	40	25	68	23	96	39.7	96.3	102	M20	11.60
218-56	3-1/2													

Notes:1. Pressed steel covers available at one end.S=Open cap,SM=Close cap. Ordering example:UCF205+SM.
2. Bearing housing solid base optional,add suffix SB as designation.