Corrosion Resistant Bearing Inserts LDK®

SUC Standard duty, Stainless steel,Wider inner ring,Setscrew locking, Factory-Lubed with food grade grease and with silicon rubber seal.



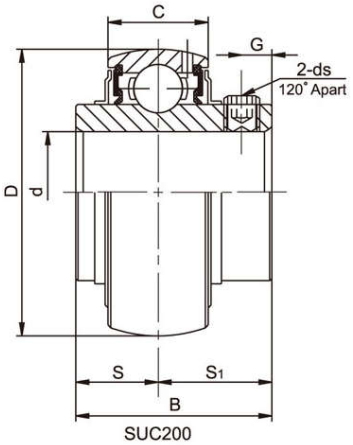

SUC200

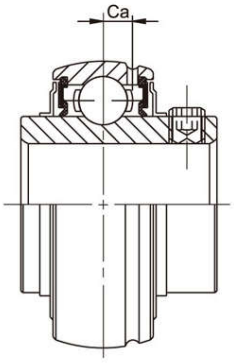

SUC200G



Bearing No.	Shaft Dia d (in)	Shaft Dia d (mm)	D	B	C	S	S1	G	ds (mm)	ds (in.UNF)	Ca	Load rating (KN) Dynamic Cr	Load rating (KN) Static Cor	Weight (kg)
SUC201		12	47	31	17	12.7	18.3	5	M6x1		4.3	9.55	4.78	0.21
201-8	1/2									1/4-28				
SUC202		15	47	31	17	12.7	18.3	5	M6x1		4.3	9.55	4.78	0.19
202-9	9/16									1/4-28				
202-10	5/8													
SUC203		17	47	31	17	12.7	18.3	5	M6x1		4.3	9.55	4.78	0.18
203-11	11/16									1/4-28				
SUC204		20	47	31	17	12.7	18.3	5	M6x1		4.3	12.82	6.65	0.16
204-12	3/4									1/4-28				
SUC205		25	52	34.1	17	14.3	19.8	5.4	M6x1		4.2	14.03	8.05	0.18
205-13	13/16									1/4-28				
205-14	7/8													
205-15	15/16													
205-16	1													
SUC206		30	62	38.1	19	15.9	22.2	5.5	M6x1		5.3	19.47	11.43	0.33
206-17	1-1/16									1/4-28				
206-18	1-1/8													
206-19	1-3/16													
206-20	1-1/4													
SUC207		35	72	42.9	20	17.5	25.4	6.9	M8x1		5.8	25.69	15.55	0.49
207-20	1-1/4									5/16-24				
207-21	1-5/16													
207-22	1-3/8													
207-23	1-7/16													
SUC208		40	80	49.2	21	19	30.2	8	M8x1		6.2	29.51	18.14	0.65
208-24	1-1/2									5/16-24				
208-25	1-9/16													
SUC209		45	85	49.2	22	19	30.2	8	M8x1		6.5	31.85	20.80	0.71
209-26	1-5/8									5/16-24				
209-27	1-11/16													
209-28	1-3/4													
SUC210		50	90	51.6	24	19	32.6	10	M10x1.25		7	34.99	23.70	0.80
210-30	1-7/8									3/8-24				
210-31	1-15/16													
210-32	2													
SUC211		55	100	55.6	25	22.2	33.4	10	M10x1.25		7.4	43.34	29.39	1.08
211-32	2									3/8-24				
212-33	2-1/16													
211-34	2-1/8													
211-35	2-3/16													
SUC212		60	110	65.1	27	25.4	39.7	10	M10x1.25		7.6	47.68	33.43	1.51
212-36	2-1/4									3/8-24				
212-37	2-5/16													
212-38	2-3/8													
212-39	2-7/16													

http://www.ldk-bearings.com