TP-SUCT Thermoplastic take up,Stainless steel inserts,With food grade grease and silicon rubber seal,Setscrew locking



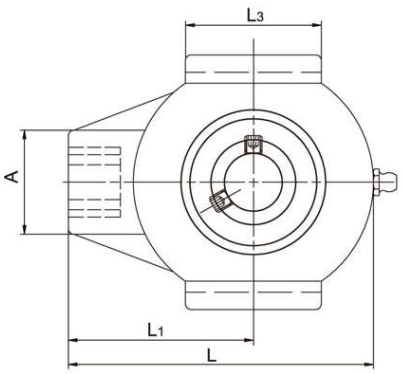

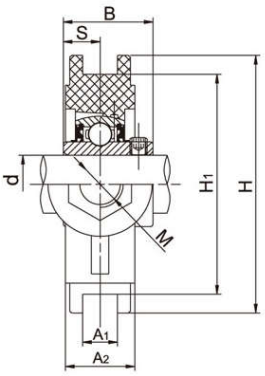

Unit No.	Shaft Dia d		Dimensions(mm)											Weight (kg)
	(in)	(mm)	L	A2	A1	L1	H	H1	M	A	L3	B	S	
TP-SUCT201 201-8	 1/2	12	99	27.5	12	64	88	76	M16	36	47	31	12.7	0.33
TP-SUCT202 202-9 202-10	 9/16 5/8	15	99	27.5	12	64	88	76	M16	36	47	31	12.7	0.33
TP-SUCT203 203-11	 11/16	17	99	27.5	12	64	88	76	M16	36	47	31	12.7	0.33
TP-SUCT204 204-12	 3/4	20	99	27.5	12	64	88	76	M16	36	47	31	12.7	0.33
TP-SUCT205 205-14 205-15 205-16	 7/8 15/16 1	25	99	27.5	12	64	88	76	M16	36	47	34.1	14.3	0.34
TP-SUCT206 206-17 206-18 206-19 206-20	 1-1/16 1-1/8 1-3/16 1-1/4	30	125	34.5	12	76	102	89	M16	40	63	38.1	15.9	0.62
TP-SUCT207 207-20 207-21 207-22 207-23	 1-1/4 1-5/16 1-3/8 1-7/16	35	125	34.5	12	76	102	89	M16	40	63	42.9	17.5	0.73
TP-SUCT208 208-24 208-25	 1-1/2 1-9/16	40	140	34.5	16	85	114	102	M16	40	80	49.2	19	0.96
TP-SUCT209 209-26 209-27 209-28	 1-5/8 1-11/16 1-3/4	45	149	40	16	90	116	102	M20	50	85	49.2	19	1.14
TP-SUCT210 210-30 210-31 210-32	 1-7/8 1-15/16 2	50	149	40	16	90	116	102	M20	50	85	51.6	19	1.17

MODE OF LOAD	BREAKING POINT OF HOUSINGS(N)						
	204	205	206	207	208	209	210
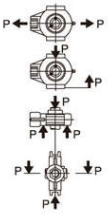	14800	15500	15800	16500	17300	18210	18860
	3930	4530	5100	6500	7800	8710	9750
	8500	10350	10900	11300	12150	12900	13550
	40770	45300	46100	44100	42800	44230	44880

Notes:Anti-Bacteria Protection Series is available by adding prefix"AB" as designation.Ordering example:ABTP-SUCT204