LDK® Bearing Inserts

UE Standard duty,Wider inner ring,Concentric locking



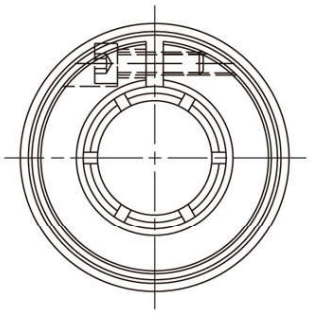

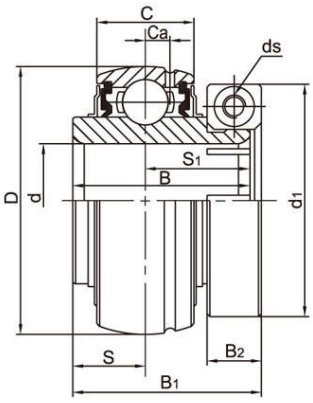

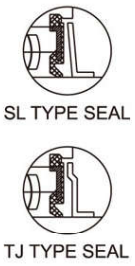

Bearing No.	Shaft Dia d		Dimensions (mm)										Load rating (KN)		Weight (kg)
	(in)	(mm)	D	B	C	S	S1	B1	B2	d1	ds	Ca	Dynamic Cr	Static Cor	
UE204		20	47	31	17	12.7	18.3	33.0	9.5	40.8	M4x0.7	4.3	12.82	6.65	0.18
204-12	3/4														
UE205		25	52	34.1	17	14.3	19.8	35.4	9.5	49.0	M4x0.7	4	14.03	8.05	0.21
205-13	13/16														
205-14	7/8														
205-15	15/16														
205-16	1														
UE206		30	62	38.1	19	15.9	22.2	39.8	9.5	55.5	M4x0.7	5.3	19.47	11.43	0.33
206-17	1-1/16														
206-18	1-1/8														
206-19	1-3/16														
206-20	1-1/4														
UE207		35	72	42.9	20	17.5	25.4	43.9	11.0	64.0	M5x0.8	5.8	25.69	15.55	0.51
207-20	1-1/4														
207-21	1-5/16														
207-22	1-3/8														
207-23	1-7/16														
UE208		40	80	49.2	21	19.0	30.2	50.2	11.0	68.0	M5x0.8	6.2	29.51	18.14	0.68
208-24	1-1/2														
208-25	1-9/16														
UE209		45	85	49.2	22	19.0	30.2	50.2	11.0	74.0	M5x0.8	6.5	31.85	20.80	0.78
209-26	1-5/8														
209-27	1-11/16														
209-28	1-3/4														
UE210		50	90	51.6	24	19.0	32.6	52.6	14.5	81.0	M6x1	7	34.99	23.70	0.85
210-30	1-7/8														
210-31	1-15/16														
210-32	2														
UE211		55	100	55.6	25	22.2	33.4	56.6	14.5	92.0	M6x1	7.4	43.34	29.39	1.16
211-32	2														
211-33	2-1/16														
211-34	2-1/8														
211-35	2-3/16														
UE212		60	110	65.1	27	25.4	39.7	66.6	17.5	103.0	M8x1.25	7.6	47.68	33.43	1.59
212-36	2-1/4														
212-37	2-5/16														
212-38	2-3/8														
212-39	2-7/16														