# LDK® All Stainless Steel Bearing Units

## SSUCP..A All stainless steel pillow blocks and inch-based housing,Setscrew locking



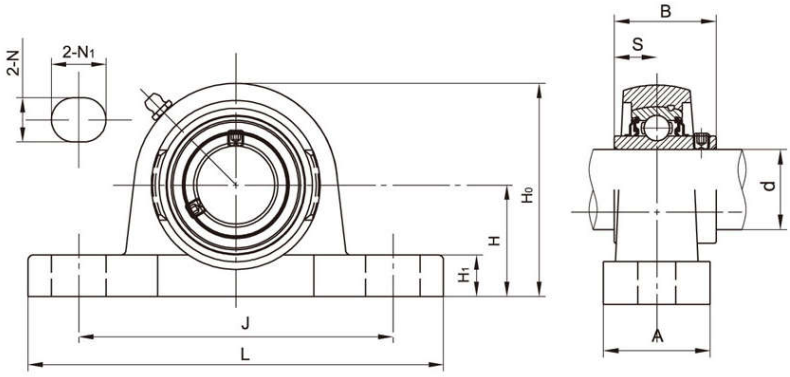


• Solid Base

| Unit No. | Shaft Dia | | Dimensions(mm) | | | | | | | | | | Bolt Size (mm) | Weight (kg) |
|---|---|---|---|---|---|---|---|---|---|---|---|---|---|---|
| Solid base housing | d | | H | L | J | A | N | $N_1$ | $H_1$ | $H_0$ | B | S | | |
| | (in) | (mm) | | | | | | | | | | | | |
| SSUCP204A | | 20 | 33.3 | 127 | 95 | 30 | 13 | 19 | 14 | 64 | 31 | 12.7 | M10 | 0.71 |
| 204-12A | 3/4 | | | | | | | | | | | | | |
| SSUCP205A | | 25 | 36.5 | 140 | 105 | 30 | 13 | 19 | 15 | 70 | 34.1 | 14.3 | M10 | 0.82 |
| 205-14A | 7/8 | | | | | | | | | | | | | |
| 205-15A | 15/16 | | | | | | | | | | | | | |
| 205-16A | 1 | | | | | | | | | | | | | |
| SSUCP206A | | 30 | 42.9 | 165 | 121 | 36 | 17 | 21 | 16 | 82 | 38.1 | 15.9 | M12 | 1.31 |
| 206-17A | 1-1/16 | | | | | | | | | | | | | |
| 206-18A | 1-1/8 | | | | | | | | | | | | | |
| 206-19A | 1-3/16 | | | | | | | | | | | | | |
| 206-20A | 1-1/4 | | | | | | | | | | | | | |
| SSUCP207A | | 35 | 47.6 | 167 | 127 | 38 | 17 | 21 | 17 | 92 | 42.9 | 17.5 | M12 | 1.65 |
| 207-20A | 1-1/4 | | | | | | | | | | | | | |
| 207-21A | 1-5/16 | | | | | | | | | | | | | |
| 207-22A | 1-3/8 | | | | | | | | | | | | | |
| 207-23A | 1-7/16 | | | | | | | | | | | | | |
| SSUCP208A | | 40 | 49.2 | 184 | 137 | 40 | 17 | 21 | 18 | 98 | 49.2 | 19 | M12 | 2.00 |
| 208-24A | 1-1/2 | | | | | | | | | | | | | |
| 208-25A | 1-9/16 | | | | | | | | | | | | | |
| SSUCP209A | | 45 | 54 | 190 | 146 | 40 | 17 | 21 | 20 | 105 | 49.2 | 19 | M12 | 2.26 |
| 209-26A | 1-5/8 | | | | | | | | | | | | | |
| 209-27A | 1-11/16 | | | | | | | | | | | | | |
| 209-28A | 1-3/4 | | | | | | | | | | | | | |
| SSUCP210A | | 50 | 57.2 | 206 | 159 | 45 | 20 | 22 | 22 | 112 | 51.6 | 19 | M16 | 2.80 |
| 210-30A | 1-7/8 | | | | | | | | | | | | | |
| 210-31A | 1-15/16 | | | | | | | | | | | | | |
| 210-32A | 2 | | | | | | | | | | | | | |
| SSUCP211A | | 55 | 63.5 | 218 | 171 | 50 | 20 | 22 | 22 | 126 | 55.6 | 22.2 | M16 | 3.83 |
| 211-32A | 2 | | | | | | | | | | | | | |
| 211-34A | 2-1/8 | | | | | | | | | | | | | |
| 211-35A | 2-3/16 | | | | | | | | | | | | | |
| SSUCP212A | | 60 | 69.9 | 238 | 184 | 60 | 20 | 25 | 25 | 137 | 65.1 | 25.4 | M16 | 5.33 |
| 212-36A | 2-1/4 | | | | | | | | | | | | | |
| 212-38A | 2-3/8 | | | | | | | | | | | | | |
| 212-39A | 2-7/16 | | | | | | | | | | | | | |

Notes:1.Grease fittings also available at 90° positions.

2.Upon request,available with plastic close cap(CC) or open cap(OC) at one end or both ends.
Ordering example: SSUCP204-12A CC.

3.Hand polishing surface housing available upon request. Ordering example: SSUCP204-12A HP.

4.Lubricated with food grade grease.