LDK® All Stainless Steel Bearing Units

SSUCF..EHB/ESB All stainless steel flange units 4-bolt,Hollow/Solid base,Setscrew locking



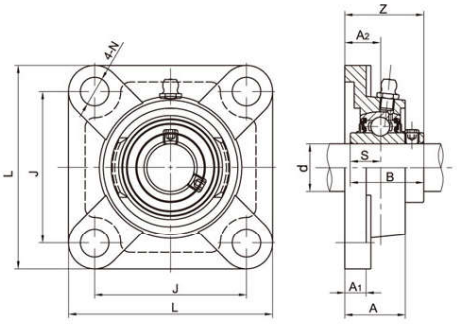

• SSUCF200EHB (Hollow Base)

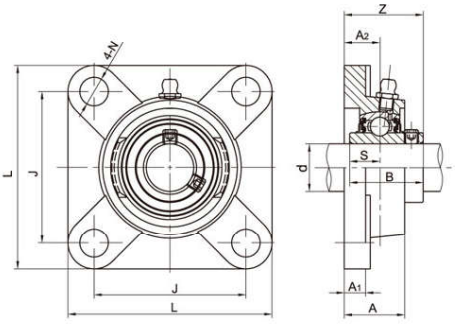

• SSUCF200ESB (Solid Base)

Unit No.		Shaft Dia		Dimensions(mm)									Bolt Size (mm)	Weight (kg)
Hollow Base Housing	Solid Base Housing	d		L	J	A_2	A_1	A	N	Z	B	S		
		(in)	(mm)											
SSUCF204EHB	SSUCF204ESB		20	86	64	15	12	25.5	12	33.3	31	12.7	M10	0.71
204-12EHB	204-12ESB	3/4												
SSUCF205EHB	SSUCF205ESB		25	95	70	16	14.3	27	12	35.8	34.1	14.3	M10	0.96
205-14EHB	205-14ESB	7/8												
205-15EHB	205-15ESB	15/16												
205-16EHB	205-16ESB	1												
SSUCF206EHB	SSUCF206ESB		30	108	83	18	14	31	12	40.2	38.1	15.9	M14	1.33
206-17EHB	206-17ESB	1-1/16												
206-18EHB	206-18ESB	1-1/8												
206-19EHB	206-19ESB	1-3/16												
206-20EHB	206-20ESB	1-1/4												
SSUCF207EHB	SSUCF207ESB		35	117	92	19	15.9	34	14	44.4	42.9	17.5	M14	1.79
207-20EHB	207-20ESB	1-1/4												
207-21EHB	207-21ESB	1-5/16												
207-22EHB	207-22ESB	1-3/8												
207-23EHB	207-23ESB	1-7/16												
SSUCF208EHB	SSUCF208ESB		40	130	102	21	15.9	36	16	51.2	49.2	19	M14	2.16
208-24EHB	208-24ESB	1-1/2												
208-25EHB	208-25ESB	1-9/16												
SSUCF209EHB	SSUCF209ESB		45	137	105	22	16.7	38	16	52.2	49.2	19	M14	2.65
209-26EHB	209-26ESB	1-5/8												
209-27EHB	209-27ESB	1-11/16												
209-28EHB	209-28ESB	1-3/4												
SSUCF210EHB	SSUCF210ESB		50	143	111	22	15.9	40	16	54.6	51.6	19	M16	2.92
210-30EHB	210-30ESB	1-7/8												
210-31EHB	210-31ESB	1-15/16												
210-32EHB	210-32ESB	2												
SSUCF211EHB	SSUCF211ESB		55	162	130	25	18	43	19	58.4	55.6	22.2	M16	4.13
211-32EHB	211-32ESB	2												
211-34EHB	211-34ESB	2-1/8												
211-35EHB	211-35ESB	2-3/16												
SSUCF212EHB	SSUCF212ESB		60	175	143	29	18	48	19	68.7	65.1	25.4	M16	5.15
212-36EHB	212-36ESB	2-1/4												
212-38EHB	212-38ESB	2-3/8												
212-39EHB	212-39ESB	2-7/16												

Notes: 1.Upon request,available with plastic close cap(CC) or open cap(OC) at one end. Ordering example SSUCF204-12ESB CC.
2.Back seal is available when mounted with narrow inner ring SSB/SSA inserts.
3.Lubricated with food grade grease.